F ELECTRICAL WIRING DIAGRAM (System Circuits)

(Cont. next page)

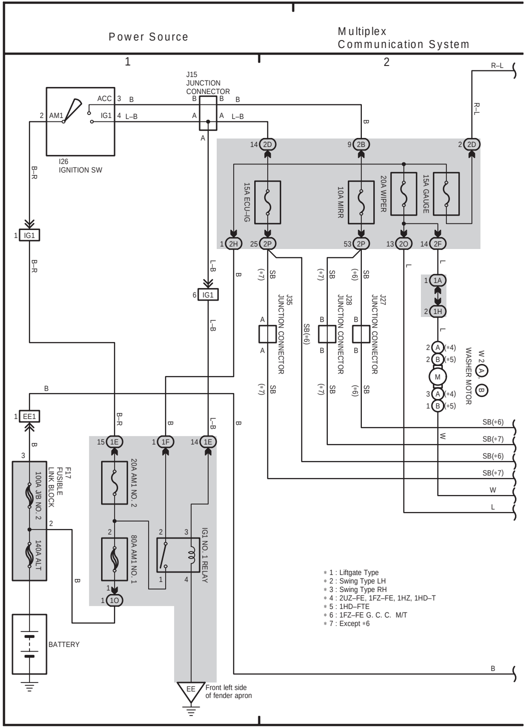
Power Source
Multiplex Communication System
1
2
J15 JUNCTION CONNECTOR
I26 IGNITION SW
ACC
AM1
IG1
B
L–B
B–R
R–L
15A ECU–IG
10A MIRR
20A WIPER
15A GAUGE
IG1
EE1
F17 FUSIBLE LINK BLOCK
100A J/B NO. 2
140A ALT
20A AM1 NO. 2
80A AM1 NO. 1
IG1 NO. 1 RELAY
BATTERY
J35 JUNCTION CONNECTOR
J28 JUNCTION CONNECTOR
J27 JUNCTION CONNECTOR
W 2 (A), (B) WASHER MOTOR
M
SB(*6)
SB(*7)
W
L
SB
EE
Front left side of fender apron

- *1 : Liftgate Type
- *2 : Swing Type LH
- *3 : Swing Type RH
- *4 : 2UZ–FE, 1FZ–FE, 1HZ, 1HD–T
- *5 : 1HD–FTE
- *6 : 1FZ–FE G. C. C. M/T
- *7 : Except *6

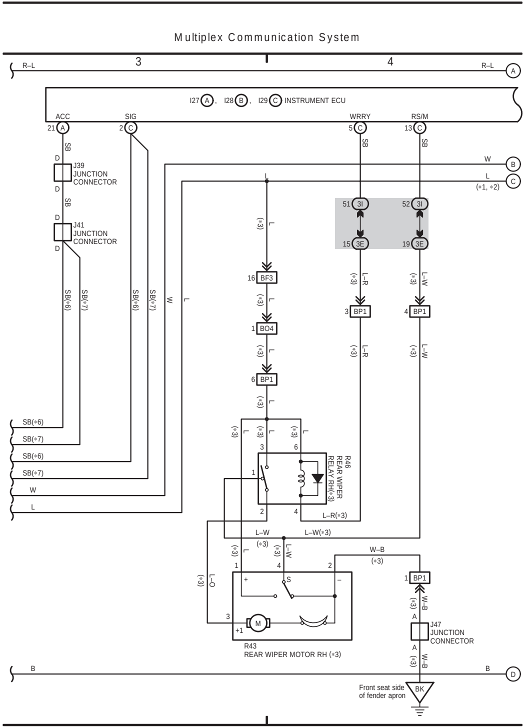
Multiplex Communication System
3
4
R–L
I27 (A), I28 (B), I29 (C) INSTRUMENT ECU
ACC
SIG
WRRY
RS/M
J39 JUNCTION CONNECTOR
J41 JUNCTION CONNECTOR
W
L
(*1, *2)
BF3
BO4
BP1
R46 REAR WIPER RELAY RH(*3)
L–R(*3)
L–W(*3)
W–B
R43 REAR WIPER MOTOR RH (*3)
M
J47 JUNCTION CONNECTOR
SB(*6)
SB(*7)
B
BK
Front seat side of fender apron
A
B
C
D

Multiplex Communication System

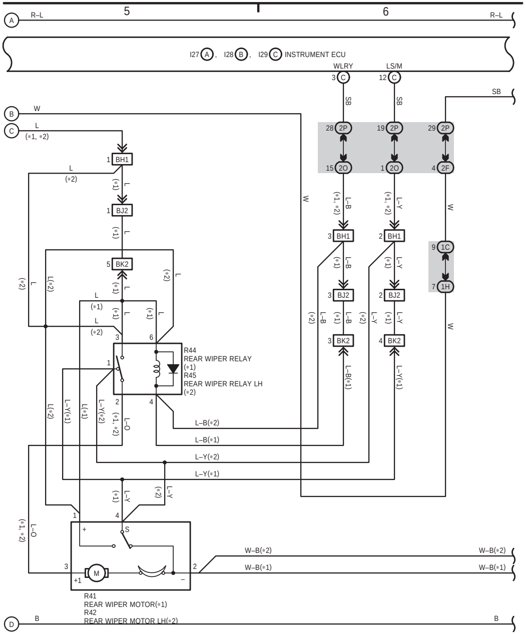
5
6
A
R–L
I27 A , I28 B , I29 C INSTRUMENT ECU
WLRY
LS/M
3 C
12 C
SB
B
W
C
L
(*1, *2)
1 BH1
L (*2)
1 BJ2
5 BK2
28 2P
19 2P
29 2P
15 2O
1 2O
4 2F
L–B
L–Y
(*1, *2)
3 BH1
2 BH1
3 BJ2
2 BJ2
3 BK2
4 BK2
L–B(*1)
L–Y(*1)
9 1C
7 1H
(*1)
(*2)
L(*2)
L–Y(*1)
L(*1)
L–Y(*2)
L–O
R44
REAR WIPER RELAY
(*1)
R45
REAR WIPER RELAY LH
(*2)
L–B(*2)
L–B(*1)
L–Y(*2)
L–Y(*1)
W–B(*2)
W–B(*1)
S
+
+1
−
M
R41
REAR WIPER MOTOR(*1)
R42
REAR WIPER MOTOR LH(*2)
D
B

Multiplex Communication System

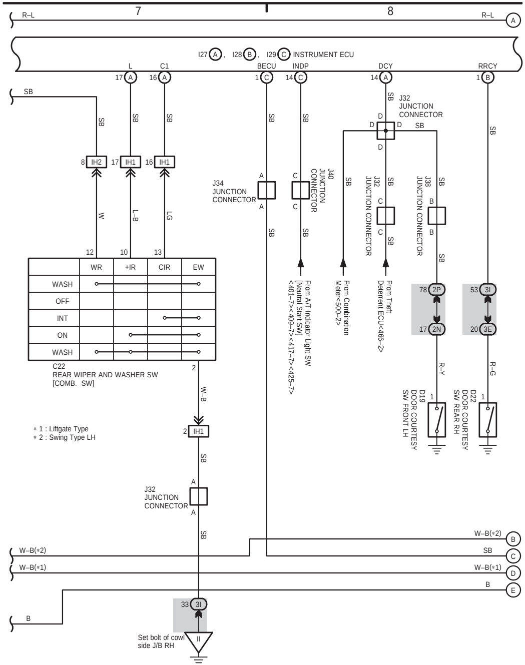
7
8
R–L
A
I27 A , I28 B , I29 C INSTRUMENT ECU
L
C1
BECU
INDP
DCY
RRCY
17 A
16 A
1 C
14 C
14 A
1 B
SB
J32
JUNCTION
CONNECTOR
8 IH2
17 IH1
16 IH1
W
L–B
LG
J34
JUNCTION
CONNECTOR
J40
JUNCTION
CONNECTOR
J32
JUNCTION CONNECTOR
J38
JUNCTION CONNECTOR
12
10
13
WR
+IR
CIR
EW
WASH
OFF
INT
ON
WASH
C22
REAR WIPER AND WASHER SW
[COMB. SW]
From A/T Indicator Light SW
[Neutral Start SW]
<401–7><409–7><417–7><425–7>
From Combination
Meter<500–2>
From Theft
Deterrent ECU<466–2>
78 2P
17 2N
53 3I
20 3E
R–Y
R–G
D19
DOOR COURTESY
SW FRONT LH
D22
DOOR COURTESY
SW REAR RH
W–B
2 IH1
*1 : Liftgate Type
*2 : Swing Type LH
J32
JUNCTION
CONNECTOR
W–B(*2)
W–B(*1)
B
C
D
E
33 3I
II
Set bolt of cowl
side J/B RH

Multiplex Communication System

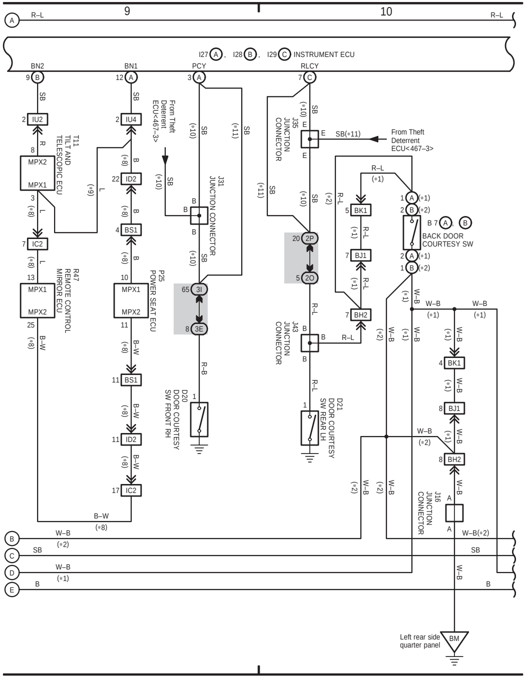
9
10
R–L
I27 A, I28 B, I29 C INSTRUMENT ECU
BN2
BN1
PCY
RLCY
T11 TILT AND TELESCOPIC ECU
MPX2
MPX1
IU2
IU4
IC2
ID2
BS1
R47 REMOTE CONTROL MIRROR ECU
P25 POWER SEAT ECU
From Theft Deterrent ECU<467–3>
J31 JUNCTION CONNECTOR
J35 JUNCTION CONNECTOR
J43 JUNCTION CONNECTOR
J16 JUNCTION CONNECTOR
3I
3E
2P
2O
BK1
BJ1
BH2
BACK DOOR COURTESY SW
D20 DOOR COURTESY SW FRONT RH
D21 DOOR COURTESY SW REAR LH
SB(*11)
Left rear side quarter panel
BM
SB
W–B
B–W
R–B
R–L
L
R
B
(*1)
(*2)
(*8)
(*9)
(*10)
(*11)

(Cont. next page)

Multiplex Communication System

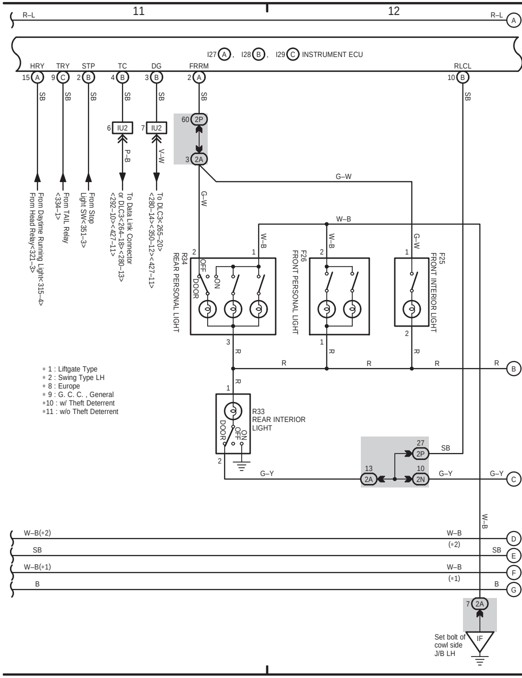
11
12
R–L
I27 A, I28 B, I29 C INSTRUMENT ECU
HRY
TRY
STP
TC
DG
FRRM
RLCL
From Daytime Running Light<315–4> From Head Relay<321–3>
From TAIL Relay <334–1>
From Stop Light SW<351–3>
To Data Link Connector or DLC3<264–18><280–13> <292–10><427–11>
To DLC3<265–20> <280–14><350–12><427–11>
IU2
2P
2A
2N
R34 REAR PERSONAL LIGHT
F26 FRONT PERSONAL LIGHT
F25 FRONT INTERIOR LIGHT
R33 REAR INTERIOR LIGHT
DOOR
OFF
ON
G–W
W–B
P–B
V–W
G–Y
SB
R
Set bolt of cowl side J/B LH
IF

∗1 : Liftgate Type
∗2 : Swing Type LH
∗8 : Europe
∗9 : G. C. C. , General
∗10 : w/ Theft Deterrent
∗11 : w/o Theft Deterrent

Multiplex Communication System

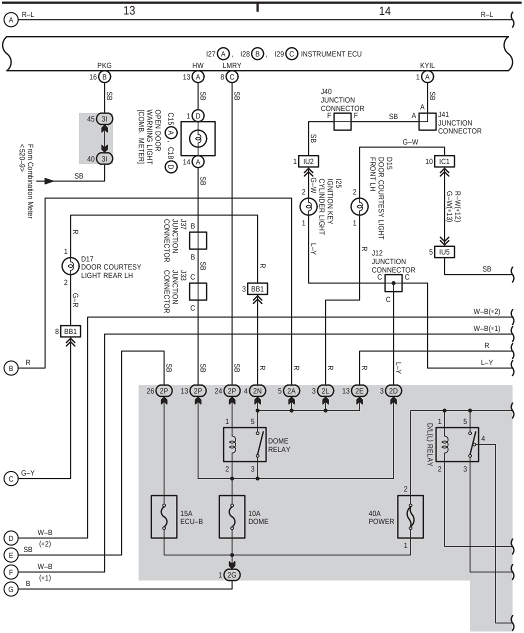
13
14
A R–L
R–L
I27 (A), I28 (B), I29 (C) INSTRUMENT ECU
PKG 16 (B)
HW 13 (A)
LMRY 8 (C)
KYIL 1 (A)
SB
45 (3I)
40 (3I)
From Combination Meter <520–9>
C15 (A), C18 (D) OPEN DOOR WARNING LIGHT [COMB. METER]
1 (D)
14 (A)
J40 JUNCTION CONNECTOR
J41 JUNCTION CONNECTOR
G–W
1 IU2
10 IC1
I25 IGNITION KEY CYLINDER LIGHT
D15 DOOR COURTESY LIGHT FRONT LH
R–W(*12) G–W(*13)
5 IU5
J37 JUNCTION CONNECTOR
J33 JUNCTION CONNECTOR
J12 JUNCTION CONNECTOR
D17 DOOR COURTESY LIGHT REAR LH
3 BB1
8 BB1
G–R
L–Y
W–B(*2)
W–B(*1)
R
B R
C G–Y
D W–B (*2)
E SB
F W–B (*1)
G B
26 (2P)
13 (2P)
24 (2P)
4 (2N)
5 (2A)
3 (2L)
13 (2E)
3 (2D)
DOME RELAY
D/L(L) RELAY
15A ECU–B
10A DOME
40A POWER
1 (2G)

Multiplex Communication System

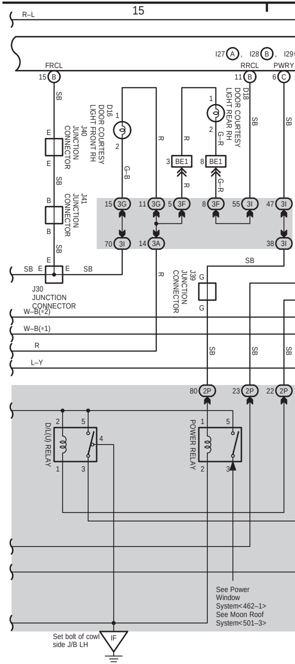
15
R–L
I27 (A), I28 (B), I29
FRCL 15 (B)
RRCL 11 (B)
PWRY 6 (C)
J40 JUNCTION CONNECTOR
D16 DOOR COURTESY LIGHT FRONT RH
D18 DOOR COURTESY LIGHT REAR RH
3 BE1
8 BE1
G–B
G–R
J41 JUNCTION CONNECTOR
15 (3G)
11 (3G)
5 (3F)
8 (3F)
55 (3I)
47 (3I)
70 (3I)
14 (3A)
38 (3I)
J30 JUNCTION CONNECTOR
J39 JUNCTION CONNECTOR
W–B(*2)
W–B(*1)
R
L–Y
SB
80 (2P)
23 (2P)
22 (2P)
D/L(U) RELAY
POWER RELAY
See Power Window System<462–1>
See Moon Roof System<501–3>
Set bolt of cowl side J/B LH
IF

* 1 : Liftgate Type
* 2 : Swing Type LH
*10 : w/ Theft Deterrent
*11 : w/o Theft Deterrent
*12 : 2UZ–FE G. C. C.
*13 : Except *12

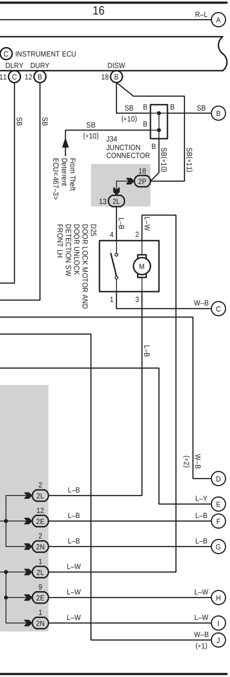
16
R–L
A
C INSTRUMENT ECU
DLRY
DURY
DISW
11 C
12 B
18 B
SB
B
(*10)
J34 JUNCTION CONNECTOR
From Theft Deterrent ECU<467–3>
SB(*10)
SB(*11)
18 2P
13 2L
L–B
L–W
4
2
1
3
M
D25 DOOR LOCK MOTOR AND DOOR UNLOCK DETECTION SW FRONT LH
W–B
C
D
(*2)
E
F
G
H
I
J
(*1)
L–Y
2 2L
12 2E
2 2N
1 2L
9 2E
1 2N

Multiplex Communication System

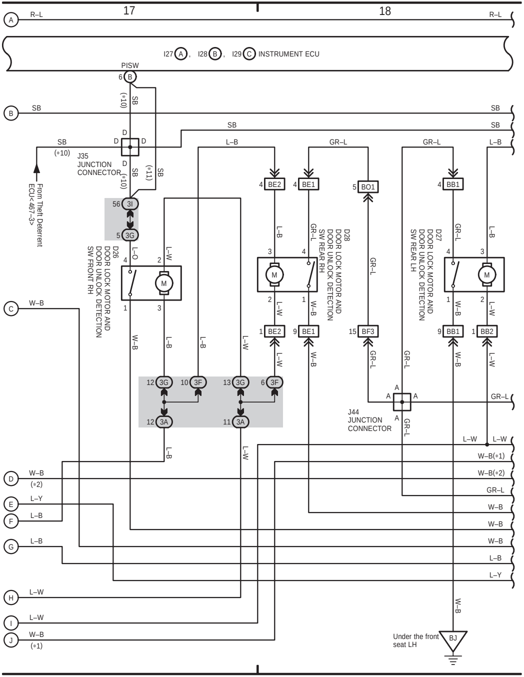
17
18
A
R–L
I27 A, I28 B, I29 C INSTRUMENT ECU
PISW
6 B
(*10)
SB
B
SB
D
J35 JUNCTION CONNECTOR
From Theft Deterrent ECU<467–3>
(*11)
56 3I
5 3G
L–O
L–W
4
2
1
3
M
D26 DOOR LOCK MOTOR AND DOOR UNLOCK DETECTION SW FRONT RH
L–B
GR–L
4 BE2
4 BE1
5 BO1
4 BB1
D28 DOOR LOCK MOTOR AND DOOR UNLOCK DETECTION SW REAR RH
D27 DOOR LOCK MOTOR AND DOOR UNLOCK DETECTION SW REAR LH
W–B
1 BE2
9 BE1
15 BF3
9 BB1
1 BB2
12 3G
10 3F
13 3G
6 3F
12 3A
11 3A
J44 JUNCTION CONNECTOR
C
D
(*2)
E
L–Y
F
G
H
I
J
(*1)
W–B(*1)
W–B(*2)
Under the front seat LH
BJ

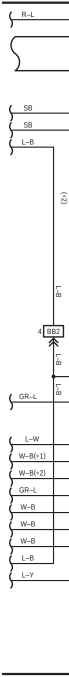
R–L
SB
SB
L–B
(*2)
L–B
4 BB2
GR–L
L–W
W–B(*1)
W–B(*2)
GR–L
W–B
W–B
W–B
L–B
L–Y

(Cont. next page)

∗ 1 : Liftgate Type
∗ 2 : Swing Type LH
∗10 : w/ Theft Deterrent
∗11 : w/o Theft Deterrent
∗14 : w/ Memory

Multiplex Communication System

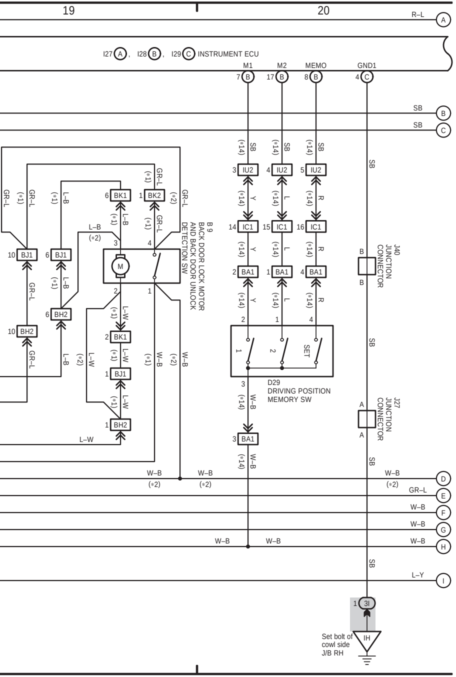

19
20
R–L
A
I27 (A), I28 (B), I29 (C) INSTRUMENT ECU
M1
M2
MEMO
GND1
7 B
17 B
8 B
4 C
SB
B
C
3 IU2
4 IU2
5 IU2
(∗14)
Y
L
R
14 IC1
15 IC1
16 IC1
2 BA1
1 BA1
4 BA1
D29
DRIVING POSITION MEMORY SW
3 BA1
W–B
6 BK1
1 BK2
GR–L
L–B
(∗1)
(∗2)
B 9
BACK DOOR LOCK MOTOR AND BACK DOOR UNLOCK DETECTION SW
M
10 BJ1
6 BJ1
6 BH2
10 BH2
2 BK1
1 BJ1
1 BH2
L–W
J40
JUNCTION CONNECTOR
J27
JUNCTION CONNECTOR
D
E
F
G
H
I
L–Y
1 3I
IH
Set bolt of cowl side J/B RH

Multiplex Communication System

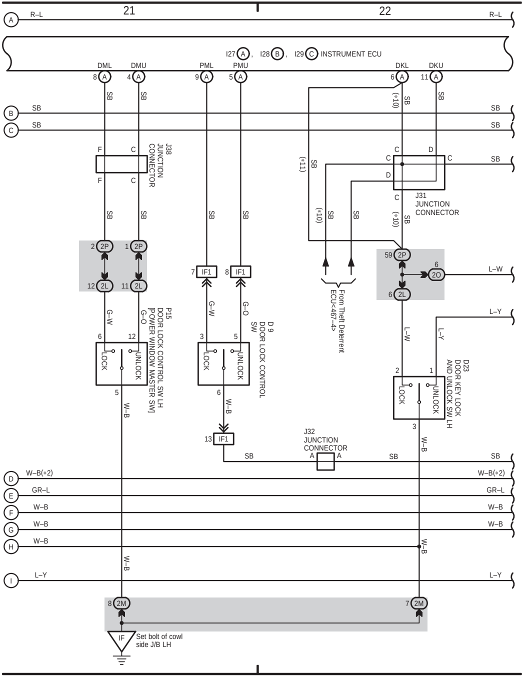

21
22
A
R–L
I27 (A), I28 (B), I29 (C) INSTRUMENT ECU
DML
DMU
PML
PMU
DKL
DKU
8 A
4 A
9 A
5 A
6 A
11 A
SB
B
C
J38
JUNCTION CONNECTOR
F
C
2 2P
1 2P
12 2L
11 2L
G–W
G–O
P15
DOOR LOCK CONTROL SW LH [POWER WINDOW MASTER SW]
LOCK
UNLOCK
7 IF1
8 IF1
D 9
DOOR LOCK CONTROL SW
13 IF1
(∗10)
(∗11)
J31
JUNCTION CONNECTOR
From Theft Deterrent ECU<467–4>
59 2P
6 2O
6 2L
L–W
L–Y
D23
DOOR KEY LOCK AND UNLOCK SW LH
J32
JUNCTION CONNECTOR
W–B(∗2)
GR–L
W–B
D
E
F
G
H
I
8 2M
7 2M
IF
Set bolt of cowl side J/B LH

Multiplex Communication System

∗ 1 : Liftgate Type
∗ 2 : Swing Type LH
∗ 4 : 2UZ–FE, 1FZ–FE, 1HZ, 1HD–T
∗ 5 : 1HD–FTE
∗10 : w/ Theft Deterrent
∗11 : w/o Theft Deterrent

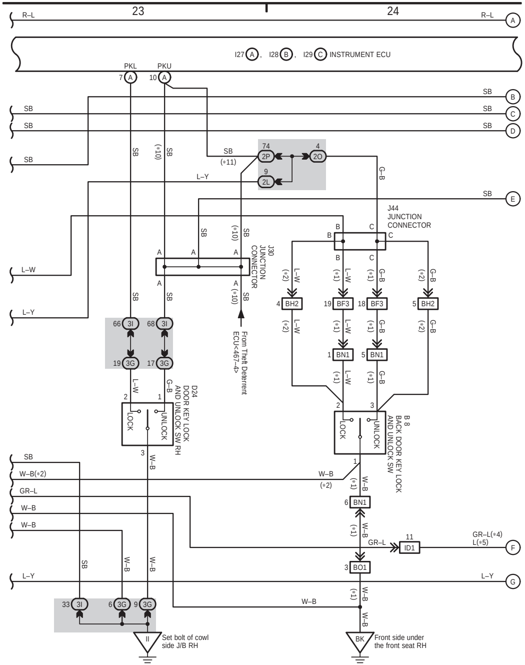
23
24
R–L
A
I27 A, I28 B, I29 C INSTRUMENT ECU
PKL
PKU
7 A
10 A
SB
B
C
D
E
(∗10)
(∗11)
74 2P
4 2O
9 2L
L–Y
G–B
J44 JUNCTION CONNECTOR
J30 JUNCTION CONNECTOR
From Theft Deterrent ECU<467–4>
L–W
(∗1)
(∗2)
4 BH2
19 BF3
18 BF3
5 BH2
1 BN1
5 BN1
66 3I
68 3I
19 3G
17 3G
D24 DOOR KEY LOCK AND UNLOCK SW RH
LOCK
UNLOCK
B 8 BACK DOOR KEY LOCK AND UNLOCK SW
W–B(∗2)
GR–L
W–B
6 BN1
11 ID1
3 BO1
GR–L(∗4)
L(∗5)
F
G
33 3I
6 3G
9 3G
II
Set bolt of cowl side J/B RH
BK
Front side under the front seat RH

LHD

LHD

F ELECTRICAL WIRING DIAGRAM (System Circuits)

Multiplex Communication System

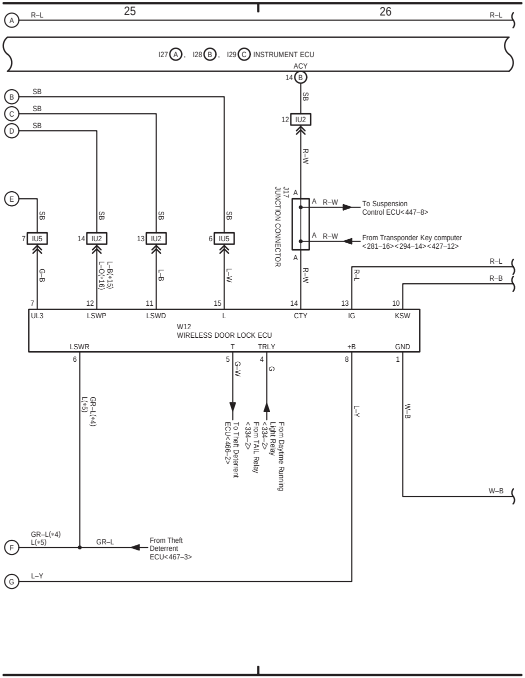
25
26
A
R–L
I27 A, I28 B, I29 C INSTRUMENT ECU
ACY
14 B
SB
12 IU2
R–W
J17 JUNCTION CONNECTOR
To Suspension Control ECU<447–8>
From Transponder Key computer <281–16><294–14><427–12>
B
C
D
E
7 IU5
14 IU2
13 IU2
6 IU5
G–B
L–B(∗15)
L–O(∗16)
L–B
L–W
R–B
UL3
LSWP
LSWD
L
CTY
IG
KSW
W12 WIRELESS DOOR LOCK ECU
LSWR
T
TRLY
+B
GND
G–W
G
To Theft Deterrent ECU<466–2>
From TAIL Relay <334–2>
From Daytime Running Light Relay <334–2>
GR–L(∗4)
L(∗5)
L–Y
W–B
F
G
From Theft Deterrent ECU<467–3>

Multiplex Communication System

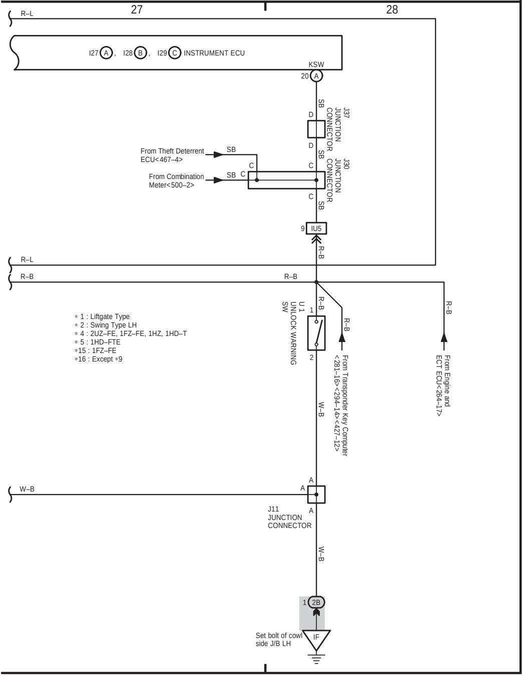
27
28
R–L
I27 (A), I28 (B), I29 (C) INSTRUMENT ECU
KSW
20 (A)
SB
D
J37 JUNCTION CONNECTOR
D
SB
From Theft Deterrent ECU<467–4>
SB
C
C
J30 JUNCTION CONNECTOR
From Combination Meter<500–2>
SB
C
C
SB
9 IU5
R–B
R–L
R–B
R–B
R–B
R–B
1
U 1 UNLOCK WARNING SW
2
R–B
From Transponder Key Computer <281–16><294–14><427–12>
R–B
From Engine and ECT ECU<264–17>
∗ 1 : Liftgate Type
∗ 2 : Swing Type LH
∗ 4 : 2UZ–FE, 1FZ–FE, 1HZ, 1HD–T
∗ 5 : 1HD–FTE
∗15 : 1FZ–FE
∗16 : Except ∗9
W–B
W–B
A
A
A
J11 JUNCTION CONNECTOR
W–B
1 (2B)
Set bolt of cowl side J/B LH
IF